VFU60

Wire cable tray for heavy duty

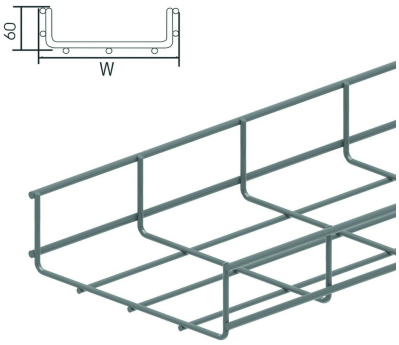

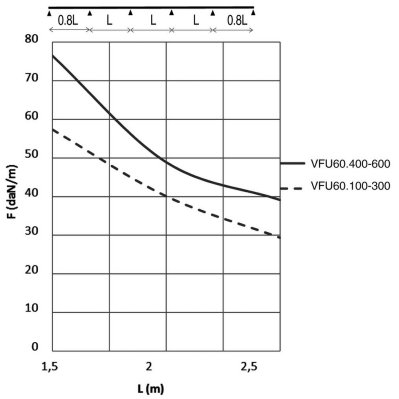

Screen: 50 x 100 mm
Wire: Ø 4.50 mm and 5.50 mm

Reference	Finish	↕ mm	↔ mm	→‖← mm	⇄ mm	kg/m	📦	Unit
VFU60.100	SZ	60	99		3000	1,200	30	M
VFU60.200	SZ	60	199		3000	1,430	30	M
VFU60.300	SZ	60	299		3000	1,780	30	M
VFU60.400	SZ	60	399		3000	2,120	30	M
VFU60.500	SZ	60	499		3000	2,470	30	M
VFU60.600	SZ	60	599		3000	2,810	30	M
ZAVFU60.100	DF	60	100		3000	1,200	30	M
ZAVFU60.200	DF	60	200		3000	1,430	30	M
ZAVFU60.300	DF	60	300		3000	1,780	30	M
ZAVFU60.400	DF	60	400		3000	2,120	30	M
ZAVFU60.500	DF	60	500		3000	2,470	30	M
ZAVFU60.600	DF	60	600		3000	2,810	30	M

LOAD DIAGRAM
This diagram illustrates the permissible uniformly distributed loads applied to multiple supports. They comply with IEC 61537 with connection to 1/5 of the span and the end span = 0,8x the span. When the joint is situated in the centre of the span, a reduction of 0,7x the admissible load is to be taken into account.

F = max. admissible load (daN/m)
L = support distance (m)
Max. deflection (m) = L/100

Usable inside height: outside height - 9mm
Usable inside width: outside width - 17mm

Legend finish
- SZ = Sendzimir
- DF = Defender

Fix with:



Support joiner for VFU(L)
VFKS

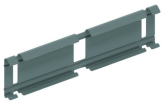

Snap-on joiner for VFU(L)
KPVF