MPVFCL
Profile for VFU(L)

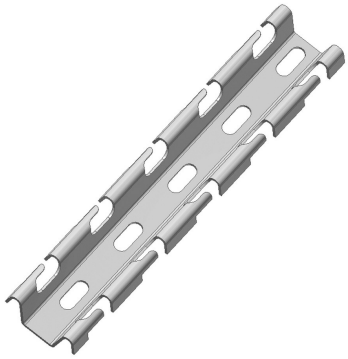

Reference	↕ mm	↔ mm	→‖← mm	⇄ mm	kg/m	📦	Unit
MPVFCL3000	27	55		3000	1,009	30	M
HDMPVFCL3000	27	55		3000	1,009	30	M

Do not use with: VFUL30.065, VFUL35.150, VFU35.150, VFUL 60.050

