SS2

SS2 Pipe Clamp

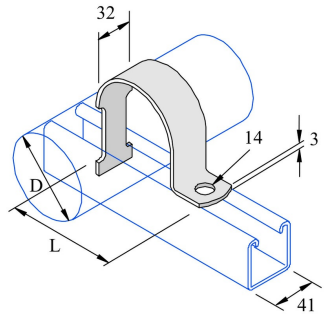

Reference	↕ mm	↔ mm	→‖← mm	⇄ mm	kg/stk		Unit
SS2/CSS		32		81	0,084	20	STK
SS2/ESS		32		96	0,113	10	STK
SS2/FSS		32		96	0,137	10	STK