P4045SS

Z21 Fitting single profile 2D14

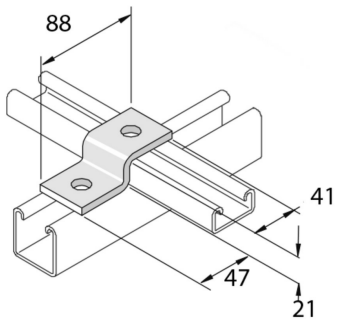

Reference	↕ mm	↔ mm	→‖← mm	⇄ mm	kg/stk	⬡	Unit
P4045SS	21	40		88	0,164	20	STK