P3301T10SPP

Assembly profile

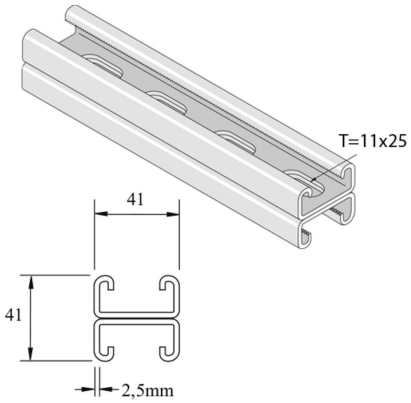

Reference	↕ mm	↔ mm	→‖← mm	⇄ mm	kg/m	⬡	Unit
P3301T10SPP	41	41	2,5	6000	3,436	150	M
P3301T10SPPX3	41	41	2,5	3000	3,530	3	M

Pickled and passivated. Stainless steel 316.