P3300T10SPP

Assembly profile

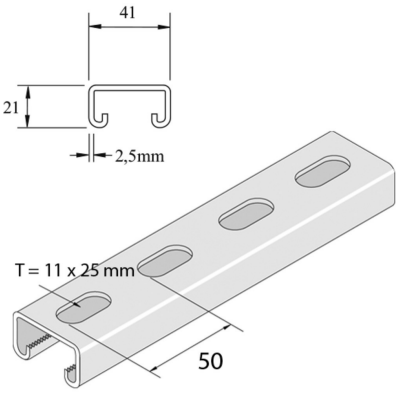

Reference	↕ mm	↔ mm	→‖← mm	⇄ mm	kg/m	📦	Unit
P3300T10SPP304	21	41	2,5	6000	1,762	300	M
P3300T10SPPX3	21	41	2,5	3000	1,761	150	M
P3300T10SPP	21	41	2,5	6000	1,880	300	M

Pickled and passivated. Stainless steel 316.