P3300SPP
Assembly profile

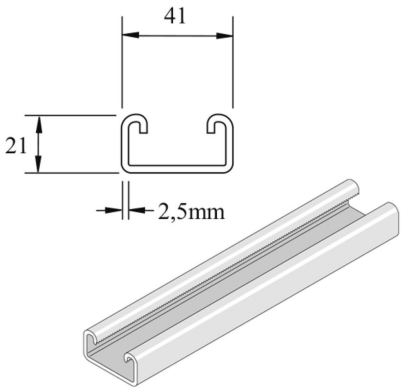

Reference	↕ mm	↔ mm	→‖← mm	⇄ mm	kg/m	⬡	Unit
P3300SPP	21	41	2,5	6000	1,859	300	M
P3300SPPX3000	21	41	2,5	3000	1,859	3	M

Pickled and passivated. Stainless steel 316.