# P2815S
## Base plate variable angle

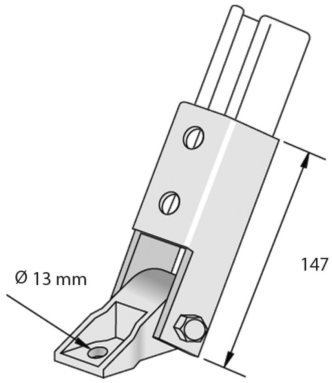


| Reference | Finish | ↕ mm | ↔ mm | →‖← mm | ⇄ mm | kg/stk | ⬡ | Unit |
|---|---|---|---|---|---|---|---|---|
| **P2815S** | ZP | | | | | 1,528 | 10 | STK |

Abbreviation:
- ZP = Zinc Plated

**Legend finish**
- ZP = Zinc plated