P2484SS

Fitting 90° angle TR 7D14

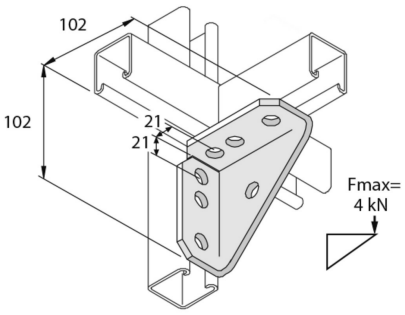

Reference	↕ mm	↔ mm	→‖← mm	⇄ mm	kg/stk	⬡	Unit
P2484SS	102	47		102	0,466	10	STK