P2348S2SPP

Assembly accessory

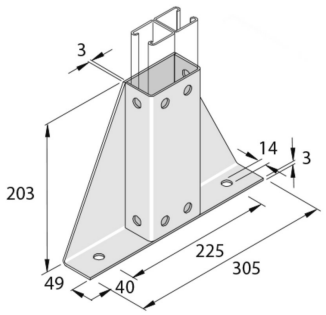

Reference	↕ mm	↔ mm	→‖← mm	⇄ mm	kg/stk	⬡	Unit
P2348S2SPP	203	49		305	2,104	1	STK

Pickled and passivated.