P2348S1SPP

Assembly accessory

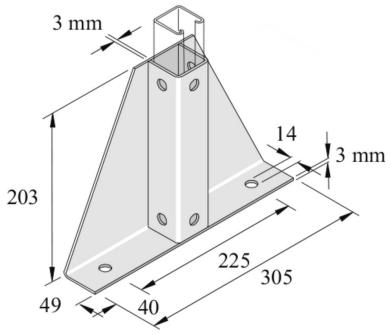

Reference	↕ mm	↔ mm	→‖← mm	⇄ mm	kg/stk		Unit
P2348S1SPP	203	49		305	1,915	1	STK

Pickled and passivated.