P2108SS

Fitting angle 120° 2D14

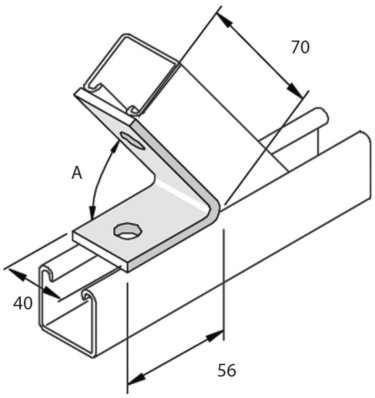

Reference	↕ mm	↔ mm	→‖← mm	⇄ mm	kg/stk	⬡	Unit
P2108SS		40			0,194	20	STK