P2097SS

Fitting angle 60° 2D14

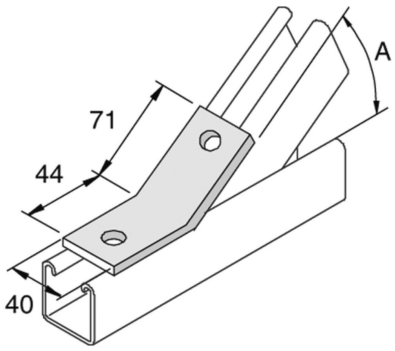

Reference	↕ mm	↔ mm	→‖← mm	⇄ mm	kg/stk	⬡	Unit
P2097SS		40			0,194	10	STK