P2095SS

Fitting angle 75° 2D14

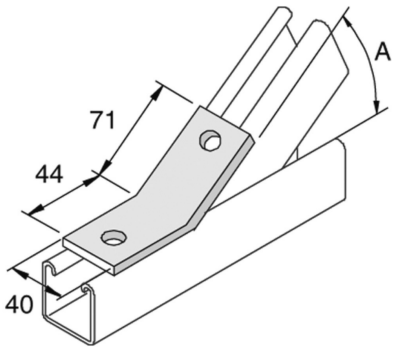

Reference	↕ mm	↔ mm	→‖← mm	⇄ mm	kg/stk	⬡	Unit
P2095SS		40			0,194	10	STK