P2073ASPP

Base plate 152 double profile 12D14

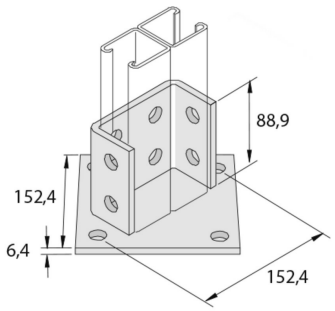

Reference	↕ mm	↔ mm	→‖← mm	⇄ mm	kg/stk		Unit
P2073ASPP	95	152		152	1,801	1	STK

Pickled and passivated.