P2072ASPP

Base plate 152 single profile 10D14

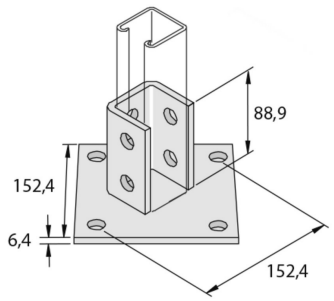

Reference	↕ mm	↔ mm	→‖← mm	⇄ mm	kg/stk		Unit
P2072ASPP	95	152		152	1,701	10	STK

Pickled and passivated.