P1983SS
Z50 Clamp

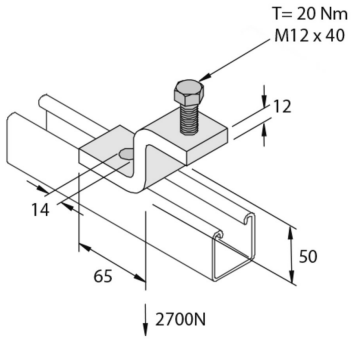

Reference	↕ mm	↔ mm	→‖← mm	⇄ mm	kg/stk	⬡	Unit
P1983SS	50	40			0,389	10	STK