P1941SS
Fitting flat 5D14

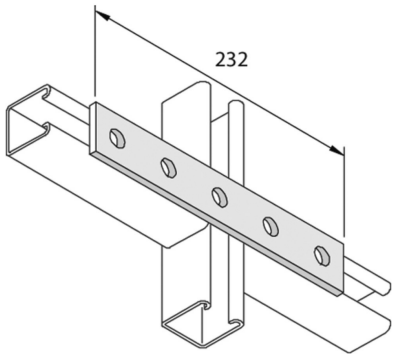

Reference	↕ mm	↔ mm	→‖← mm	⇄ mm	kg/stk	⬡	Unit
P1941SS		40		232	0,375	20	STK