P1796-BSS

I-beam clamp S83

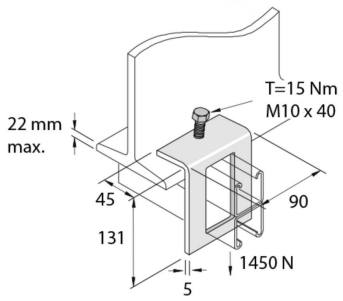

Reference	↕ mm	↔ mm	→‖← mm	⇄ mm	kg/stk	⬡	Unit
P1796-BSS	132	45		90	0,609	10	STK