P1580SS
Fitting flat X 4D14

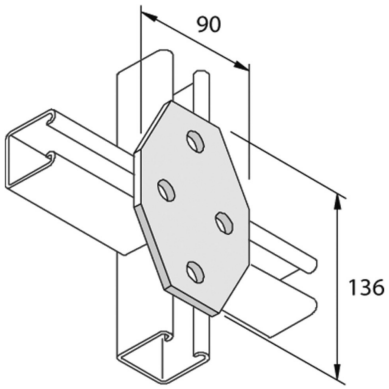

Reference	↕ mm	↔ mm	→‖← mm	⇄ mm	kg/stk	⬡	Unit
P1580SS		90		136	0,494	10	STK