P1546SS

Fitting angle 45° 2D14

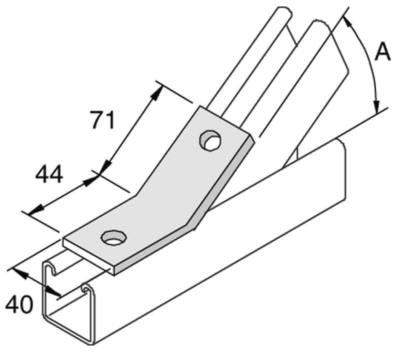

Reference	↕ mm	↔ mm	→‖← mm	⇄ mm	kg/stk	⬡	Unit
P1546SS		40			0,194	10	STK