P1458SS

Fitting 90° angle L 3D14

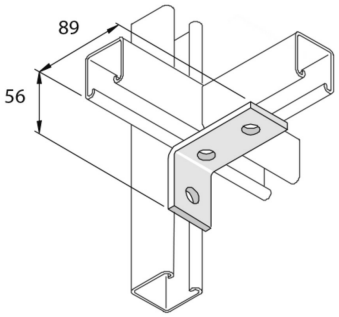

Reference	↕ mm	↔ mm	→‖← mm	⇄ mm	kg/stk	⬡	Unit
P1458SS	56	40		89	0,219	10	STK