P1359SS

Fitting 90° angle LTR 4D14

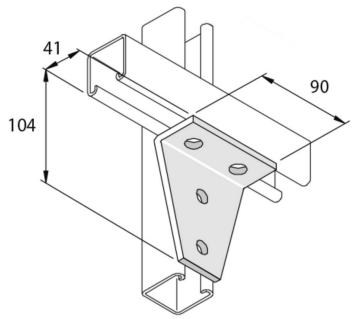

Reference	↕ mm	↔ mm	→‖← mm	⇄ mm	kg/stk	⬡	Unit
P1359SS	104	41		90	0,494	10	STK