P1358SS
Fitting flat TR 4D14

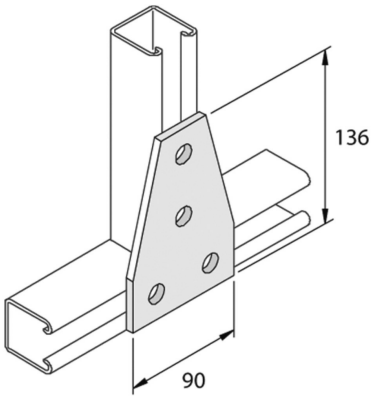

Reference	↕ mm	↔ mm	→‖← mm	⇄ mm	kg/stk	⬡	Unit
P1358SS	136			90	0,494	10	STK