P1326SS

Fitting 90° angle L 2D14

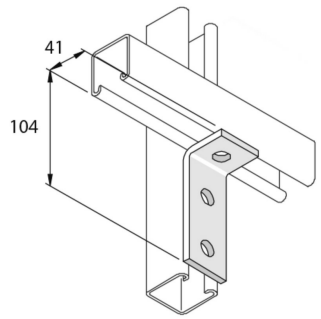

Reference	↕ mm	↔ mm	→‖← mm	⇄ mm	kg/stk	⬡	Unit
P1326SS	41	40		104	0,219	20	STK