P1325SS

Fitting 90° angle L 4D14

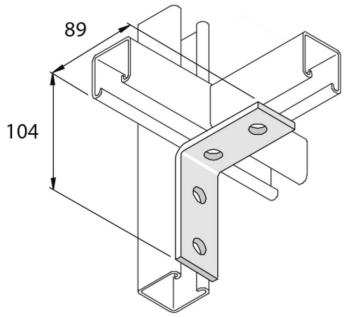

Reference	↕ mm	↔ mm	→‖← mm	⇄ mm	kg/stk	⬡	Unit
P1325SS	89	40		104	0,297	10	STK