P1272SS
I-beam clamp C25

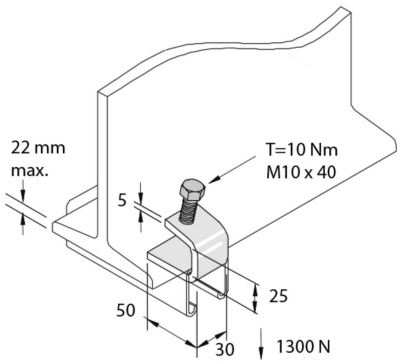

Reference	↕ mm	↔ mm	→‖← mm	⇄ mm	kg/stk	⬡	Unit
P1272SS	25	30		50	0,123	20	STK