P1271SS
I-beam clamp C63

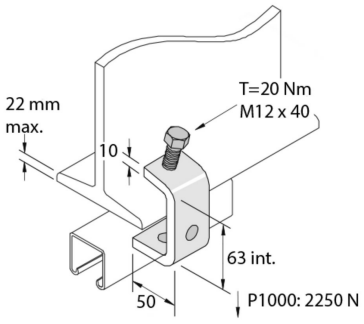

Reference	↕ mm	↔ mm	→‖← mm	⇄ mm	kg/stk	⬡	Unit
P1271SS	63	40		50	0,431	10	STK