P1218SS

21x2.5 Channel Coupler

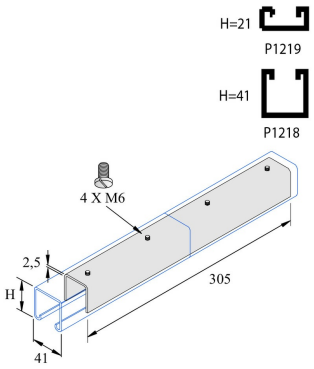

Reference	↕ mm	↔ mm	→‖← mm	⇄ mm	kg/stk	⬡	Unit
P1218SS	41	41	2,5	305	0,566	10	STK

Abbreviation:
- SS = stainless steel