P1186SS

Fitting angle 135° 2D14

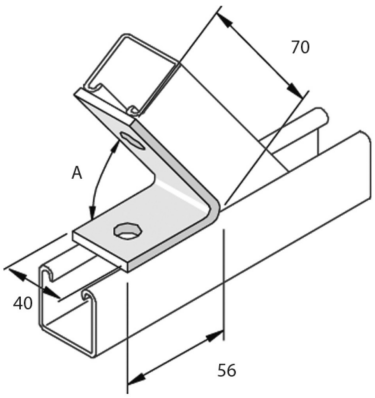

Reference	↕ mm	↔ mm	→‖← mm	⇄ mm	kg/stk	⬡	Unit
P1186SS					0,194	20	STK

A = 135°