P1067SS
Fitting flat 4D14

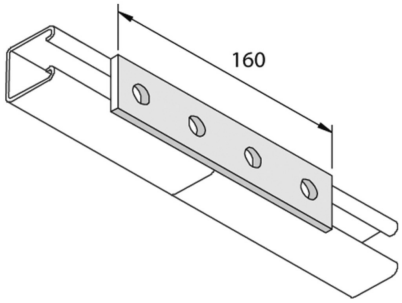

Reference	↕ mm	↔ mm	→‖← mm	⇄ mm	kg/stk	⬡	Unit
P1067SS		40		160	0,258	20	STK