# P1044SS
## C96 Fitting 4D14

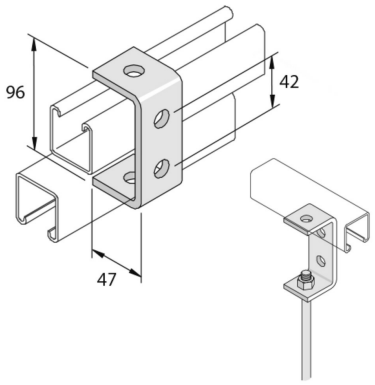


| Reference | ↕ mm | ↔ mm | →‖← mm | ⇄ mm | kg/stk | ⬡ | Unit |
|---|---|---|---|---|---|---|---|
| **P1044SS** | 96 | 40 | | 47 | 0,287 | 10 | STK |