P1043SS

OM41 Fitting double profile 6D14

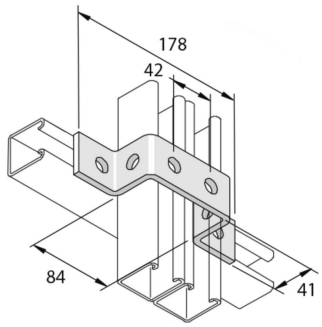

Reference	↕ mm	↔ mm	→‖← mm	⇄ mm	kg/stk	⬡	Unit
P1043SS	41	40		178	0,401	10	STK