P1037SS

Fitting 90° angle Lb 3D14

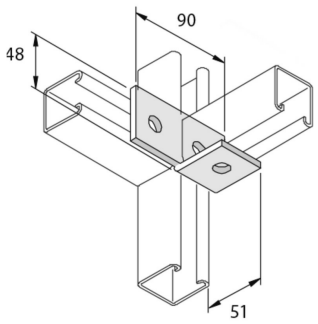

Reference	↕ mm	↔ mm	→‖← mm	⇄ mm	kg/stk	⬡	Unit
P1037SS	51	48		90	0,327	10	STK