P1036SS
Fitting flat L 3D14

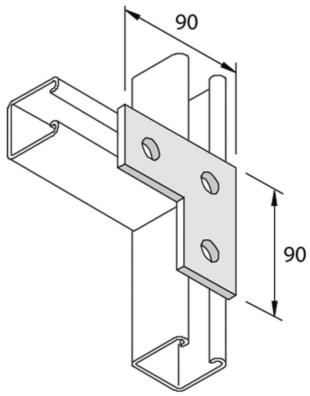

Reference	↕ mm	↔ mm	→‖← mm	⇄ mm	kg/stk	⬡	Unit
P1036SS		90		90	0,240	20	STK