P1031SS
Fitting flat T 4D14

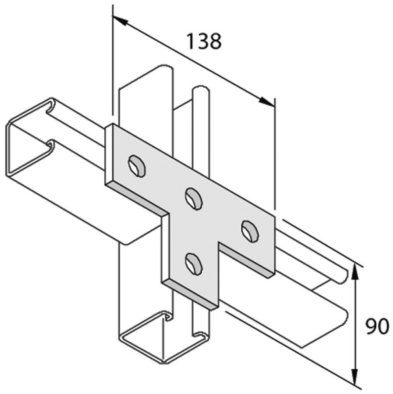

Reference	↕ mm	↔ mm	→‖← mm	⇄ mm	kg/stk	⬡	Unit
P1031SS	90			138	0,385	10	STK