P1001TSPP

Assembly profile

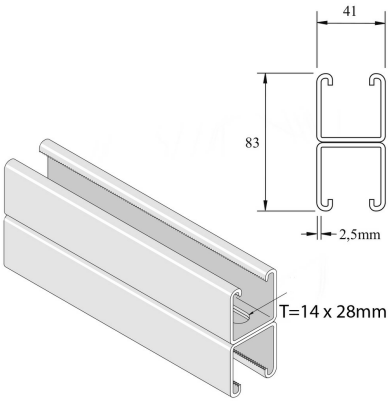

Reference	↕ mm	↔ mm	→‖← mm	⇄ mm	kg/m		Unit
P1001TSPP	83	41	2,5	6000	5,357	150	M
P1001TSPPX3	82	41	2,5	3000	5,324	3	M

Pickled and passivated. Stainless steel 316.