P1001SPP

Assembly profile

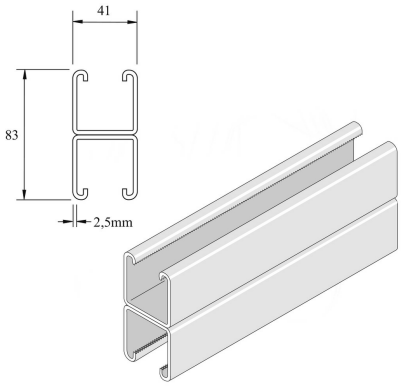

Reference	↕ mm	↔ mm	→‖← mm	⇄ mm	kg/m	📦	Unit
P1001SPP	82	41	2,5	6000	5,616	6	M
P1001SPPX3000	82	41	2,5	3000	5,616	3	M

Pickled and passivated. Stainless steel 316.