P1000TSPP304

Assembly profile

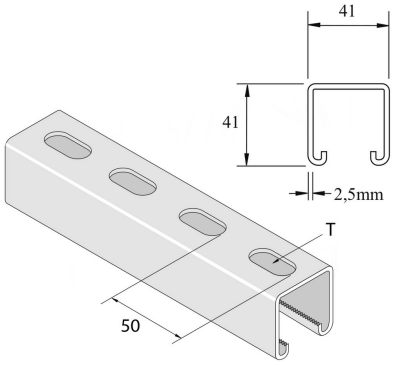

Reference	↕ mm	↔ mm	→‖← mm	⇄ mm	kg/m	📦	Unit
P1000TSPP304	41	41	2,5	6000	2,482	300	M
P1000TSPP304X3	41	41	2,5	3000	2,482	150	M

Pickled and passivated. Stainless steel 304.