P1000TSPP

Assembly profile

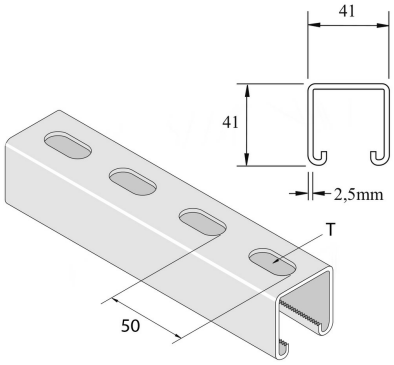

Reference	↕ mm	↔ mm	→‖← mm	⇄ mm	kg/m	📦	Unit
P1000TSPP	41	41	2,5	6000	2,657	300	M
P1000TSPPX3000	41	41	2,5	3000	2,657	150	M

Pickled and passivated. Stainless steel 316.