P1000SPP

Assembly profile

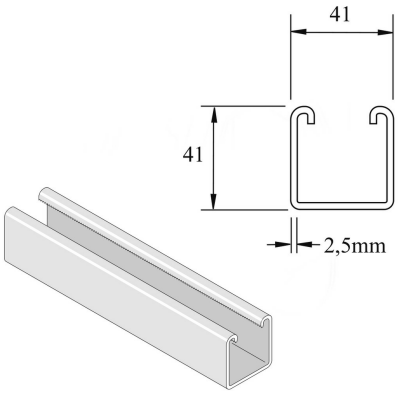

Reference	↕ mm	↔ mm	→‖← mm	⇄ mm	kg/m	⬡	Unit
P1000SPP	41	41	2,5	6000	2,803	300	M
P1000SPPX3000	41	41	2,5	3000	2,803	150	M

Pickled and passivated. Stainless steel 316.