I6WK
Welded bracket

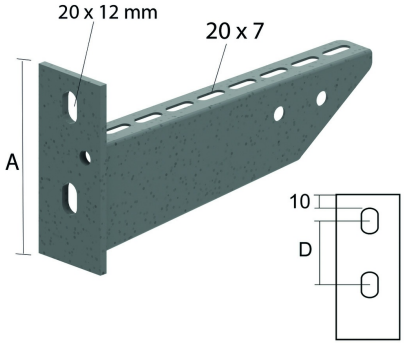

For direct fixing on the wall or on ceiling profiles.

Width	Max. load (in daN)	A	D
100	360	98	38
150	300	102	42
200	240	106	46
300	250	114	54
400	260	122	62
500	220	130	70
600	180	138	78

Reference	↕ mm	↔ mm	→‖← mm	⇄ mm	kg/stk	⬡	Unit
I6WK100	98	117			0,300	24	STK
I6WK150	102	167			0,360	24	STK
I6WK200	106	217			0,430	12	STK
I6WK300	114	317			0,730	12	STK
I6WK400	122	417			0,880	6	STK
I6WK500	130	517			1,300	6	STK
I6WK600	138	617			1,600	6	STK

For fixing on the ceiling profile, the necessary fixing set is to be ordered separately: sliding nut I6PNP10 and bolt I6B10.20.
Max. load (in daN): Uniformly distributed load (UDL) over complete width of cantilever brackets.

Pickled and passivated.