I6PNP

Sliding nut for supporting profile

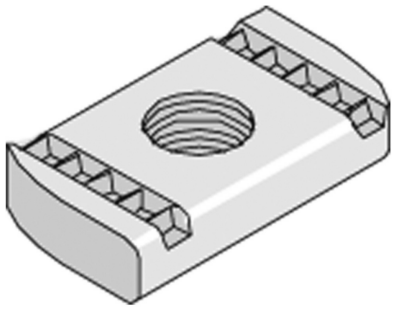

Reference	↕ mm	↔ mm	→‖← mm	⇄ mm	kg/stk	📦	Unit
PNP06SS			M6		0,028	100	STK
PNP08SS			M8		0,034	100	STK
PNP10SS			M10		0,038	100	STK
PNP12ASS			M12		0,038	100	STK