I6PB
Ceiling bracket

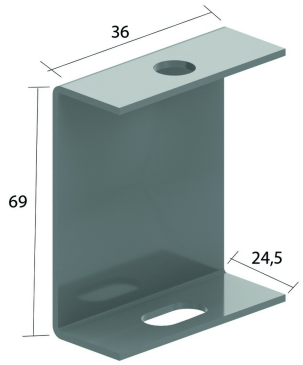

Reference	↕ mm	↔ mm	→‖← mm	⇄ mm	kg/stk	⬡	Unit
I6PB	70				0,100	20	STK

Pickled and passivated.