I6LOMEGA150

Bracket / Ceiling profile

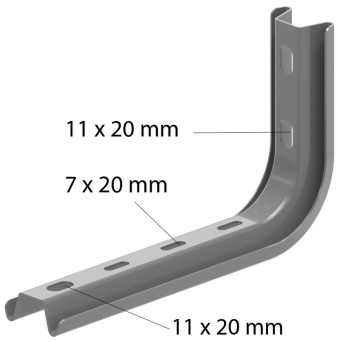

	Max. load (in daN)
100	110
150	100
200	90
300	70
400	50
500	40
600	30

Reference	↕ mm	↔ mm	→‖← mm	⇄ mm	kg/stk	⬡	Unit
I6LOMEGA150.100	145	145			0,300	12	STK
I6LOMEGA150.150	145	195			0,320	12	STK
I6LOMEGA150.200	145	245			0,340	12	STK
I6LOMEGA150.300	145	345			0,490	6	STK
I6LOMEGA150.400	145	445			0,540	6	STK
I6LOMEGA150.500	145	545			0,640	6	STK
I6LOMEGA150.600	145	645			0,770	6	STK

Use the I6VOMEGA to avoid compression of the profiles.

Pickled and passivated.