I6COMEGA290

Open suspension bracket

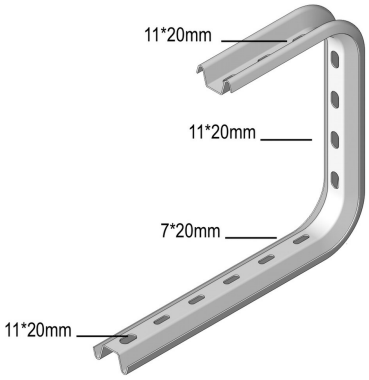

Useful for direct mounting to the ceiling or with threaded rod I6TIM8 or I6TIM10.

	Max. load (in daN)
100	70
150	60
200	60
300	50
400	50

Reference	↕ mm	↔ mm	→‖← mm	⇄ mm	kg/stk	📦	Unit
I6COMEGA290.100	290	145			0,520	12	STK
I6COMEGA290.150	290	195			0,560	12	STK
I6COMEGA290.200	290	245			0,620	12	STK
I6COMEGA290.300	290	345			0,820	6	STK
I6COMEGA290.400	290	445			0,930	6	STK

Fixing of the cable tray by I6VM6.20. Use the I6VOMEGA to avoid compression of the profile.

Pickled and passivated.