I4COMEGA290

Open suspension bracket

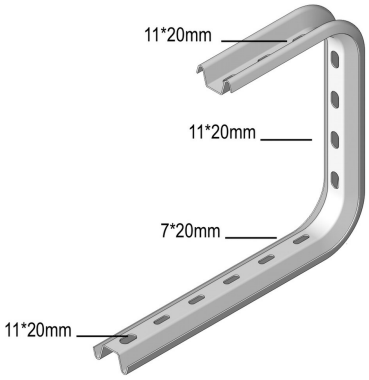

Useful for direct mounting to the ceiling or with threaded rod I6TIM 8 or I6TIM10.

	Max. load (in daN)
100	70
150	60
200	60
300	50
400	50

Reference	↕ mm	↔ mm	→‖← mm	⇄ mm	kg/stk		Unit
I4COMEGA290.100	290	145			0,520	12	STK
I4COMEGA290.150	290	195			0,560	12	STK
I4COMEGA290.200	290	245			0,620	12	STK
I4COMEGA290.300	290	345			0,820	6	STK
I4COMEGA290.400	290	445			0,930	6	STK

Fixing of the cable tray by I6VM6.20. Use the I4VOMEGA to avoid compression of the profile.

Pickled and passivated.