P4000T10

Assembly profile

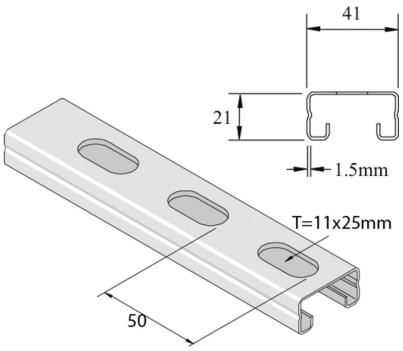

Reference	Finish	↕ mm	↔ mm	→‖← mm	⇄ mm	kg/m	⬡	Unit
P4000T10	PG	21	41	1,5	6000	1,103	6	M
P4000T10X2	PG	21	41	1,5	2000	1,103	2	M
P4000T10X3	PG	21	41	1,5	3000	1,160	3	M

Abbreviation:
- ZP = Zinc Plated

Legend finish
- PG = Pregalvanised