P2348-S1

Base plate TR305 single profile 8D14

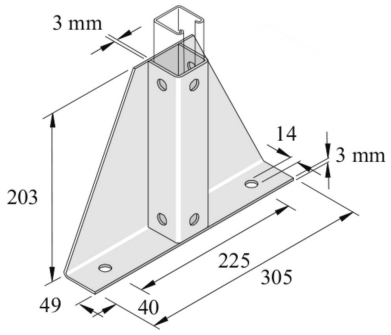

Reference	Finish	↕ mm	↔ mm	→‖← mm	⇄ mm	kg/stk	⬡	Unit
P2348-S1	HD	203	49		305	1,952	1	STK
P2348-S1DF	DF	203			305	1,952	10	STK

Abbreviation:
- HG = Hot-Dip Galvanised

Legend finish
- HD =
- DF = Defender