P1834A
Assembly accessory

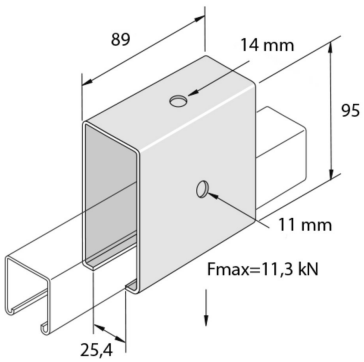

Reference	Finish	↕ mm	↔ mm	→‖← mm	⇄ mm	kg/stk	📦	Unit
P1834A	HG	95	41		89	1,058	1	STK

Abbreviation:
- HG = Hot-Dip Galvanised

Legend finish
- HG = Hot-dip galvanised